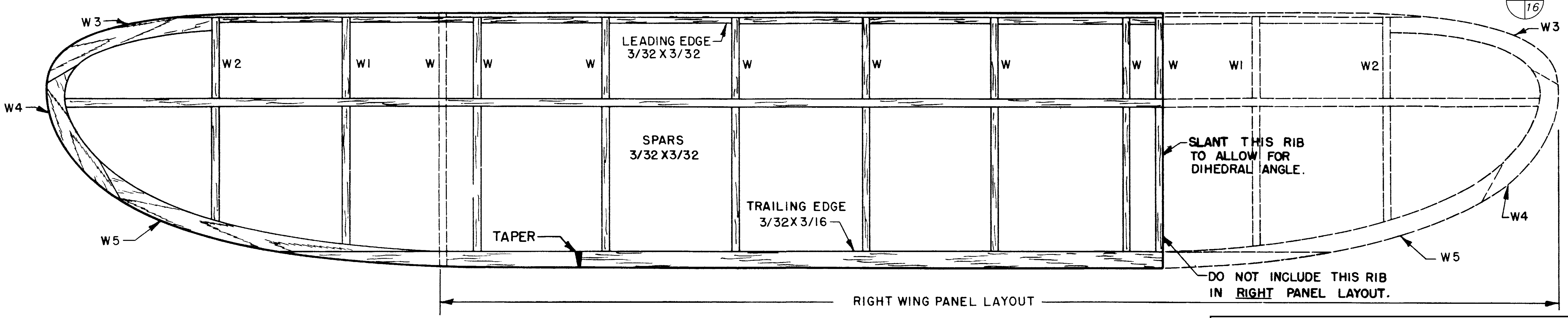

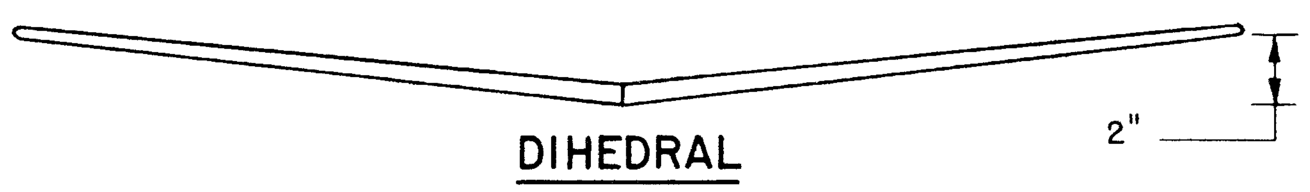

HINTS - KITS - SUPPLIES
SEE BERKELEY
CATALOG - HANDBOOK
25 CENTS - AT YOUR DEALER OR BY MAIL

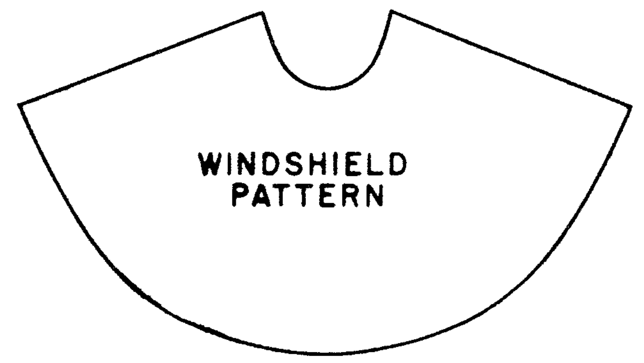

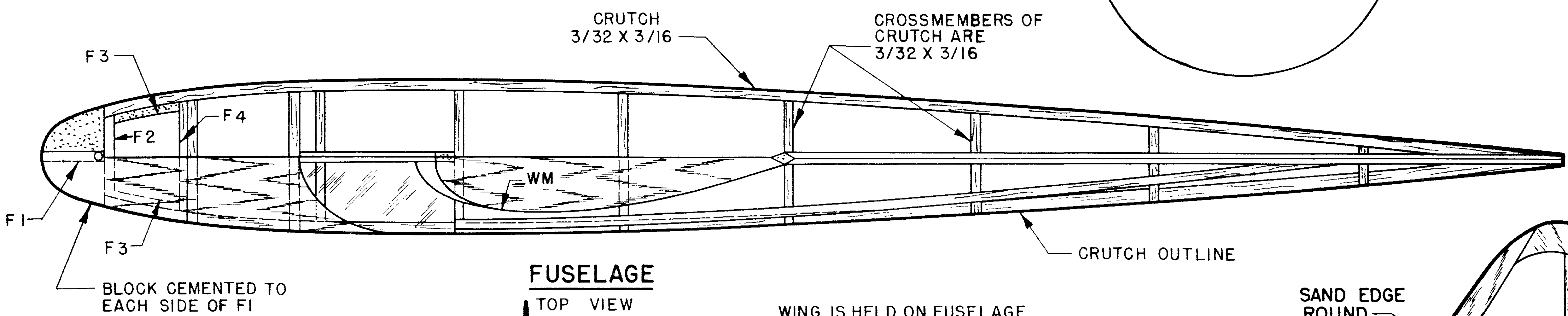

FUSELAGE
TOP VIEW

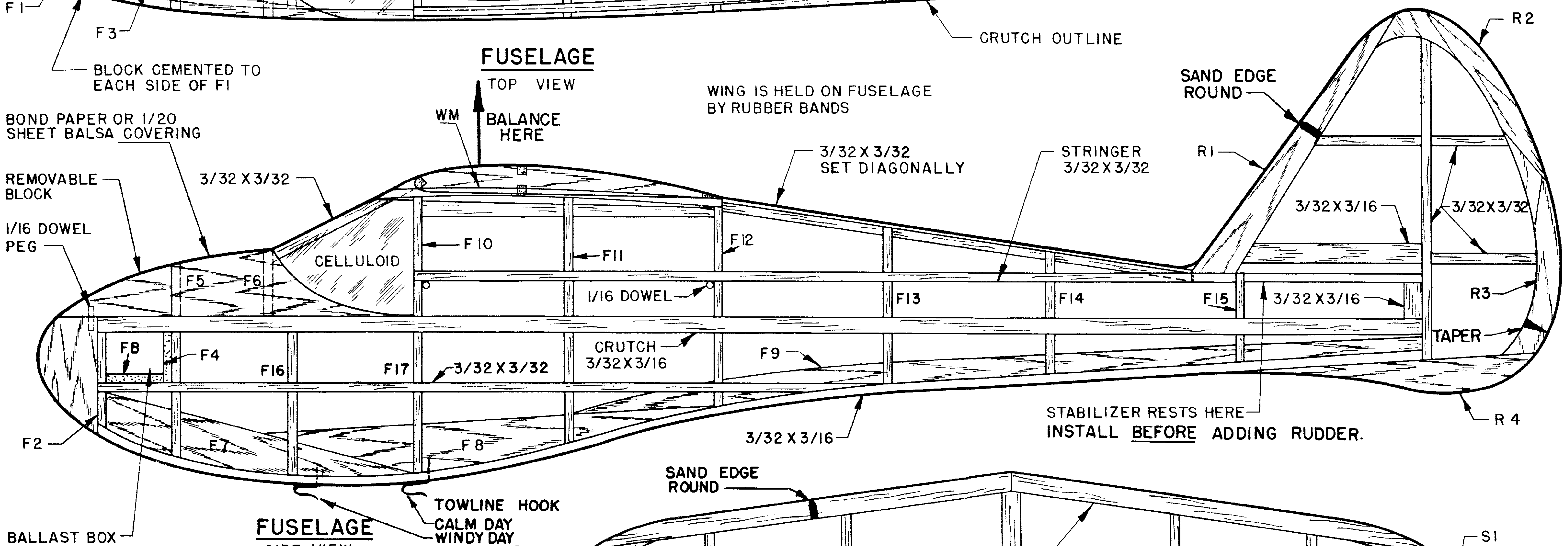

FUSELAGE
SIDE VIEW

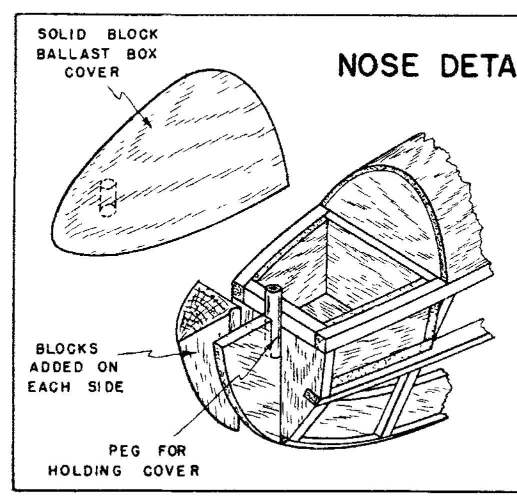

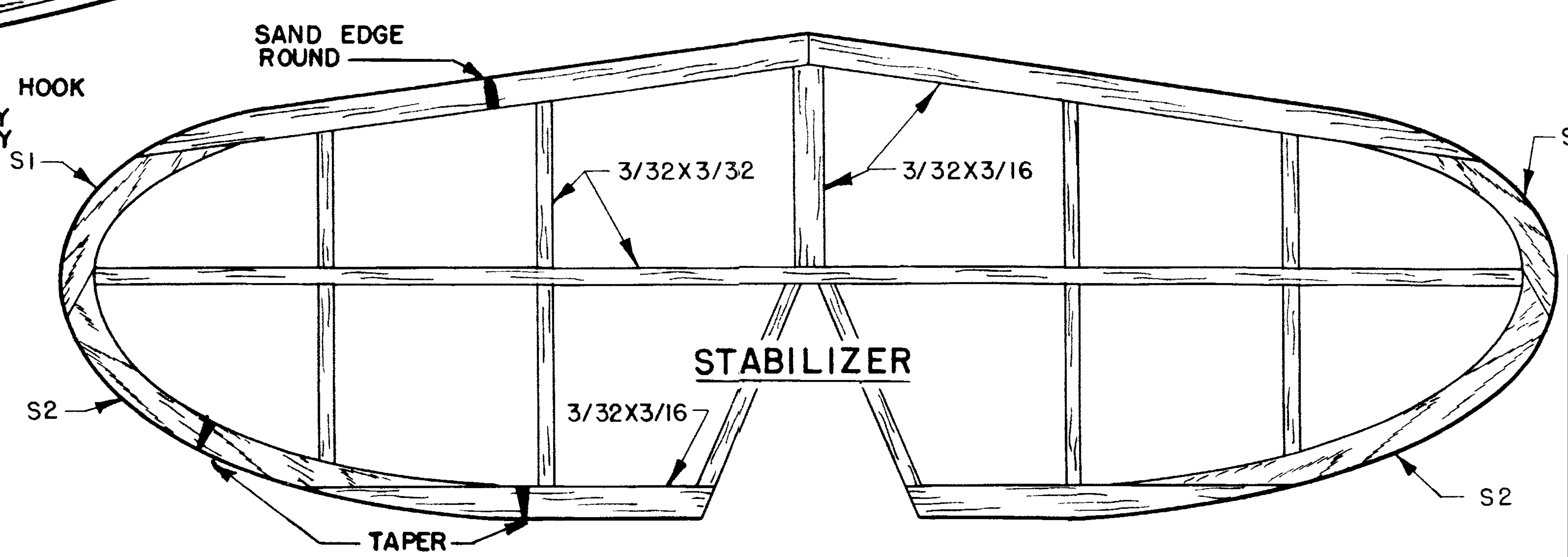

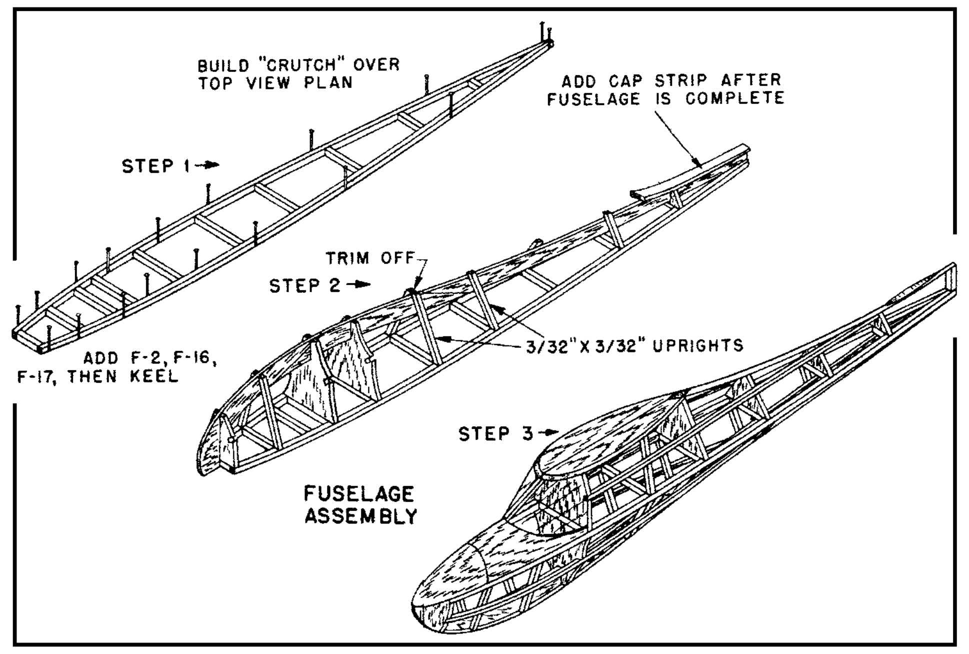

INSTRUCTIONS FOR BUILDING AND FLYING

This model is simple in structure and design and should offer no difficulties in construction, even to the beginner. Before startinf the construction of the airplane, look over the plans and sketches carefully to obtain a general idea of the construction. Select a flat board, table top, or workbench for layout work. It is best to have a model knife and sandpaper handy.

FUSELAGE. Study the fuselage assembly sketch carefully. Build the "Crutch" (Step I) directly over the top view of the fuselage. Lay a sheet of wax paper over the plans to prevent cement from sticking to the paper. Cut out the keel parts, F-7, F-8, and F-9 and also bulkheads F-2,F-16, and F-17. Cement the keel pieces together, using the fuselage side view for layout. Cement the bulkheads F-2
Cement the bulkheads to the crutch and add the keel. Cut additional vertical crossmembers and cement in place at each station. Trim off these uprights and add the 3/32" x 3/16" cap strips along the bottom.

Remove the structure from the plans. Install the ballast box in the nose. Add the top bulkheads and stringers. Shape the nose blocks. Finally, add the wing mount "WM", completing Setp III.
Step III.

TAIL SURFACES. The rudder and stabilizer are flat and are laid out directly on the plan. The tail surfaces are covered on both sides.

WING. Construct each wing panel separately on the plans. Slant the center rib to allow for dihedral when the panels are cemented together. Use a 2" block under each tip while joining the panels.

ASSEMBLY AND COVERING. Cover the stabilizer first and attach it to the fuselage. Next add the rudder and cover it. The fuselage is covered with small strips cut lengthwise. The nose on the top side is covered with either bond paper or 1/20" sheet balsa. The celluloid windshield is added last. The wing is held on the fuselage with a rubber band. "Silkspan" covering is included with this model. For detailed instructions on covering see the BERKELEY CATALOG-HANDBOOK.

FLYING. The Sinbad Jr. is towed into the air with about 75 feet of very light twine or heavy thread. Tie a loop in the end of the thread so that it will not tighten on the hook.(Bowline knot.) About 6 inches from the loop tie a small piece of light rag (About 2" x 8"). The wind resistance of the rag will help pull the line off the tow hook.

If the model turns sharply to either side, correct by warping the wings.(Breath on the wing while twisting gently in your hands.) A slight turn can be corrected by twisting the rudder. First tests with the towline should be done on a calm day. Tow the model by running into the wind. An assistant can hand launch the model as you begin to run. A small length of rubber thread, about 15-feet*long, attached to the runner's end of the towline makes launching easier. Sinbad Jr., becuase of its size, does not use any towing stabilizing mechanisms as are used in the larger sizes. Therefore, should the model turn sharply while being towed, let go of the towline.

"SINBAD JR"
30" WINGSPAN FLYING MODEL

© 1949
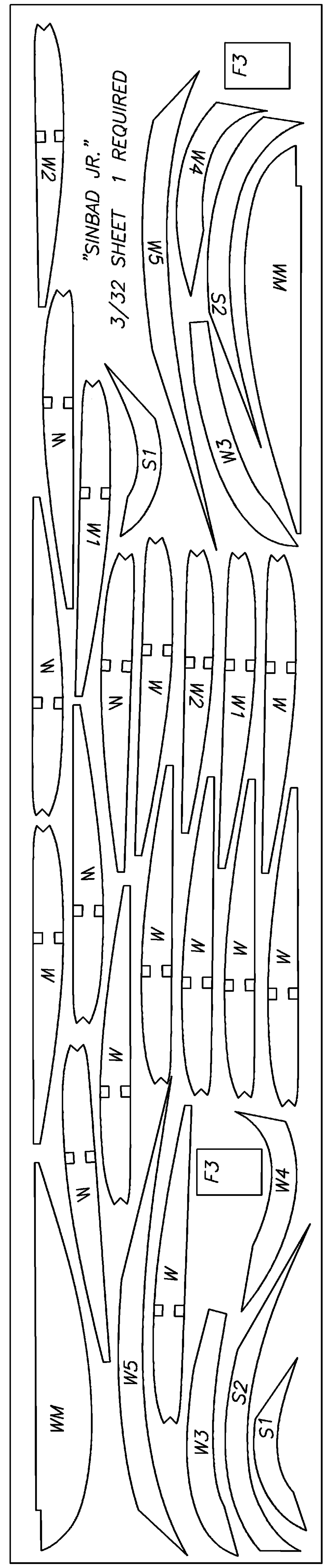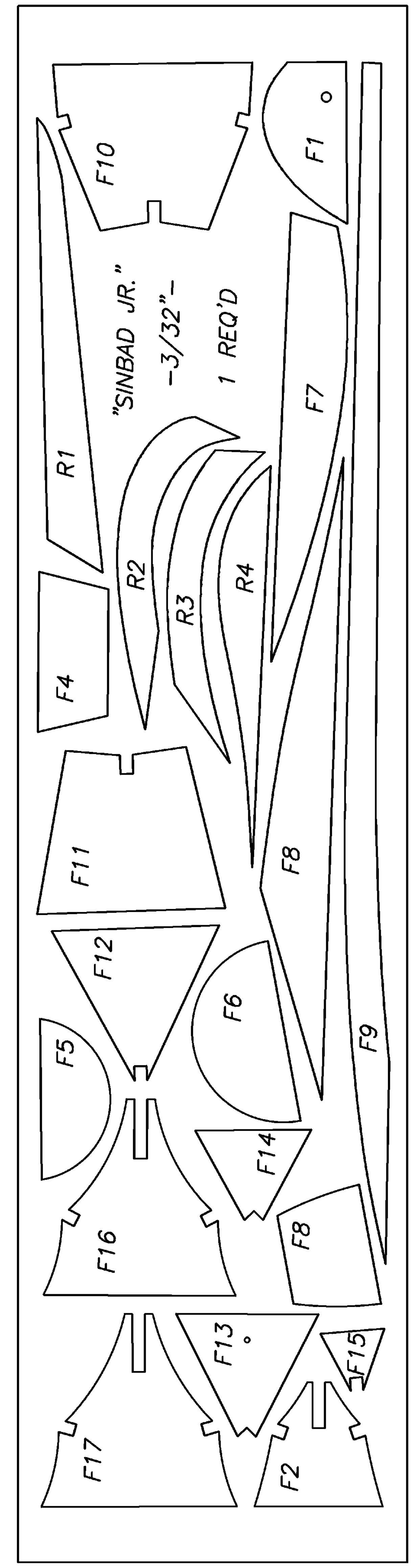
Berkeley MODELS, INC.
140 GREENPOINT AVE. • BROOKLYN 22, N. Y.